FIgures

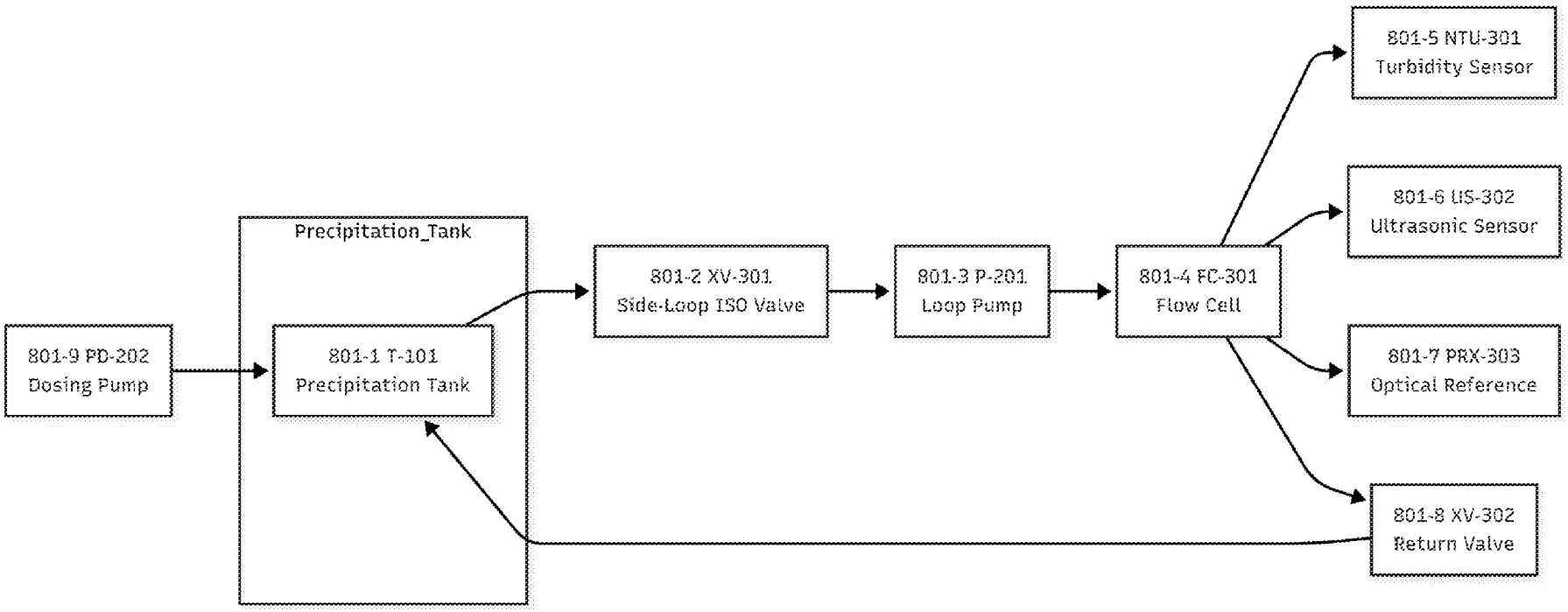
801-9 PD-202
Dosing Pump
Precipitation_Tank
801-1 T-101
Precipitation Tank
801-2 XV-301
Side-Loop ISO Valve
801-3 P-201
Loop Pump
801-4 FC-301
Flow Cell
801-5 NTU-301
Turbidity Sensor
801-6 US-302
Ultrasonic Sensor
801-7 PRX-303
Optical Reference
801-8 XV-302
Return Valve

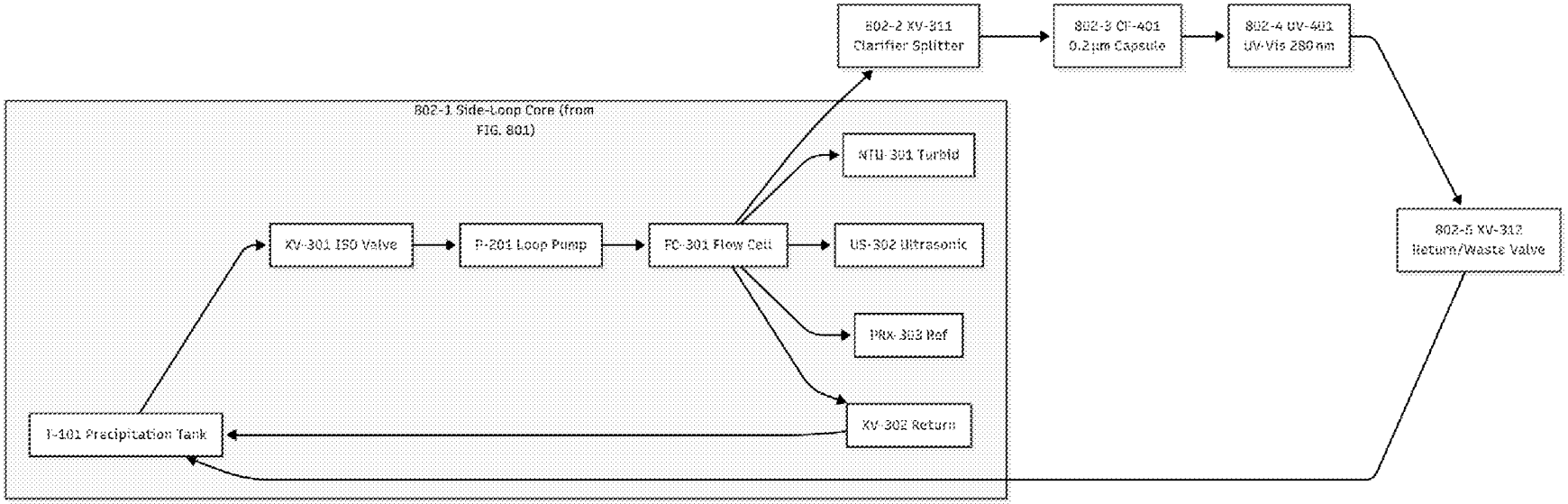
802-1 Side-Loop Core (from FIG. 801)
T-101 Precipitation Tank
XV-301 ISO Valve
P-201 Loop Pump
FC-301 Flow Cell
NTU-301 Turbid
US-302 Ultrasonic
PRX-303 Ref
XV-302 Return
802-2 XV-311 Clarifier Splitter
802-3 CF-401 0.2 µm Capsule
802-4 UV-401 UV-Vis 280 nm
802-5 XV-312 Return/Waste Valve

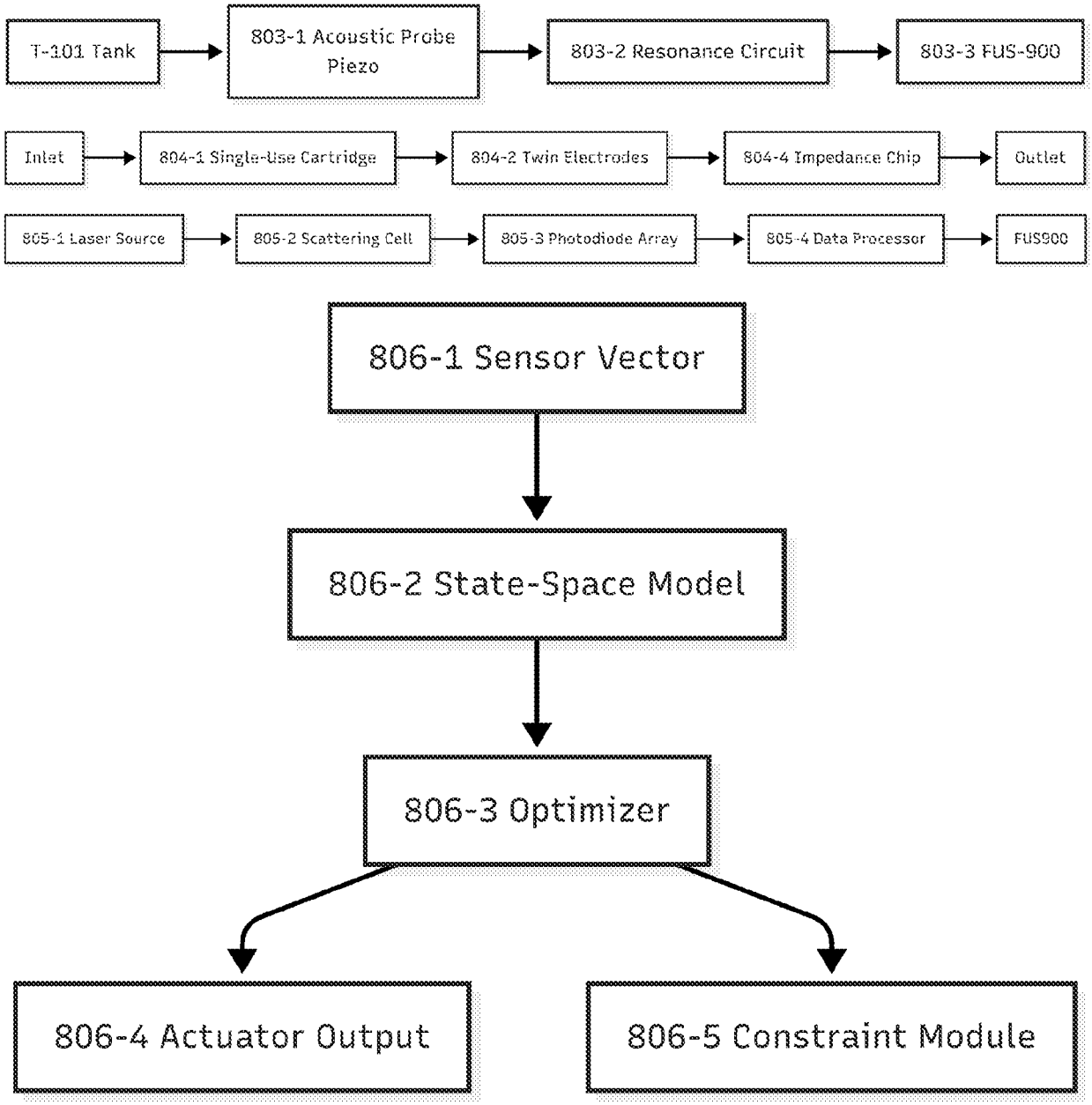
T-101 Tank
803-1 Acoustic Probe Piezo
803-2 Resonance Circuit
803-3 FUS-900
Inlet
804-1 Single-Use Cartridge
804-2 Twin Electrodes
804-4 Impedance Chip
Outlet
805-1 Laser Source
805-2 Scattering Cell
805-3 Photodiode Array
805-4 Data Processor
FUS900
806-1 Sensor Vector
806-2 State-Space Model
806-3 Optimizer
806-4 Actuator Output
806-5 Constraint Module

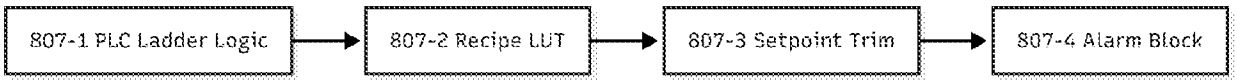
807-1 PLC Ladder Logic
807-2 Recipe LUT
807-3 Setpoint Trim
807-4 Alarm Block

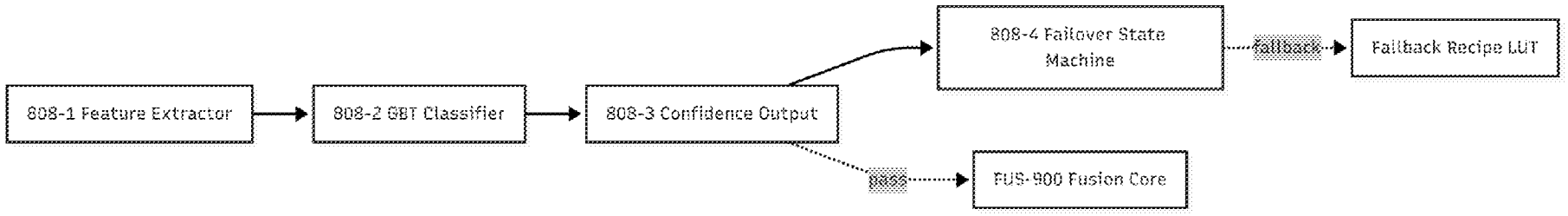
808-1 Feature Extractor
808-2 GBT Classifier
808-3 Confidence Output
808-4 Failover State Machine
fallback
Fallback Recipe LUT
pass
FUS-900 Fusion Core

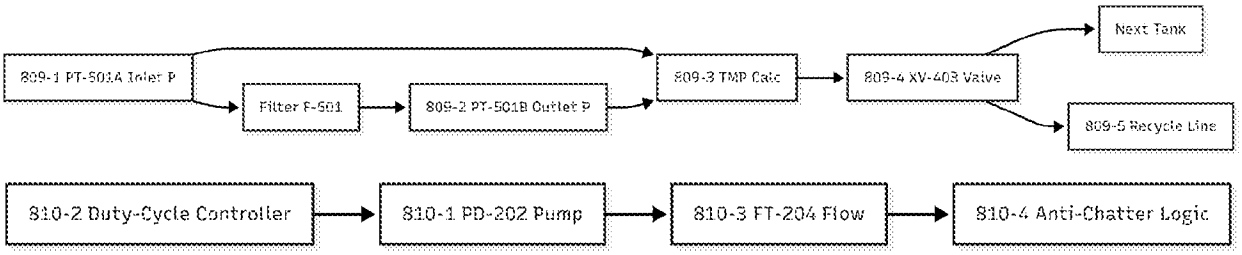
809-1 PT-501A Inlet P
Filter F-501
809-2 PT-501B Outlet P
809-3 TMP Calc
809-4 XV-403 Valve
Next Tank
809-5 Recycle Line

810-2 Duty-Cycle Controller
810-1 PD-202 Pump
810-3 FT-204 Flow
810-4 Anti-Chatter Logic

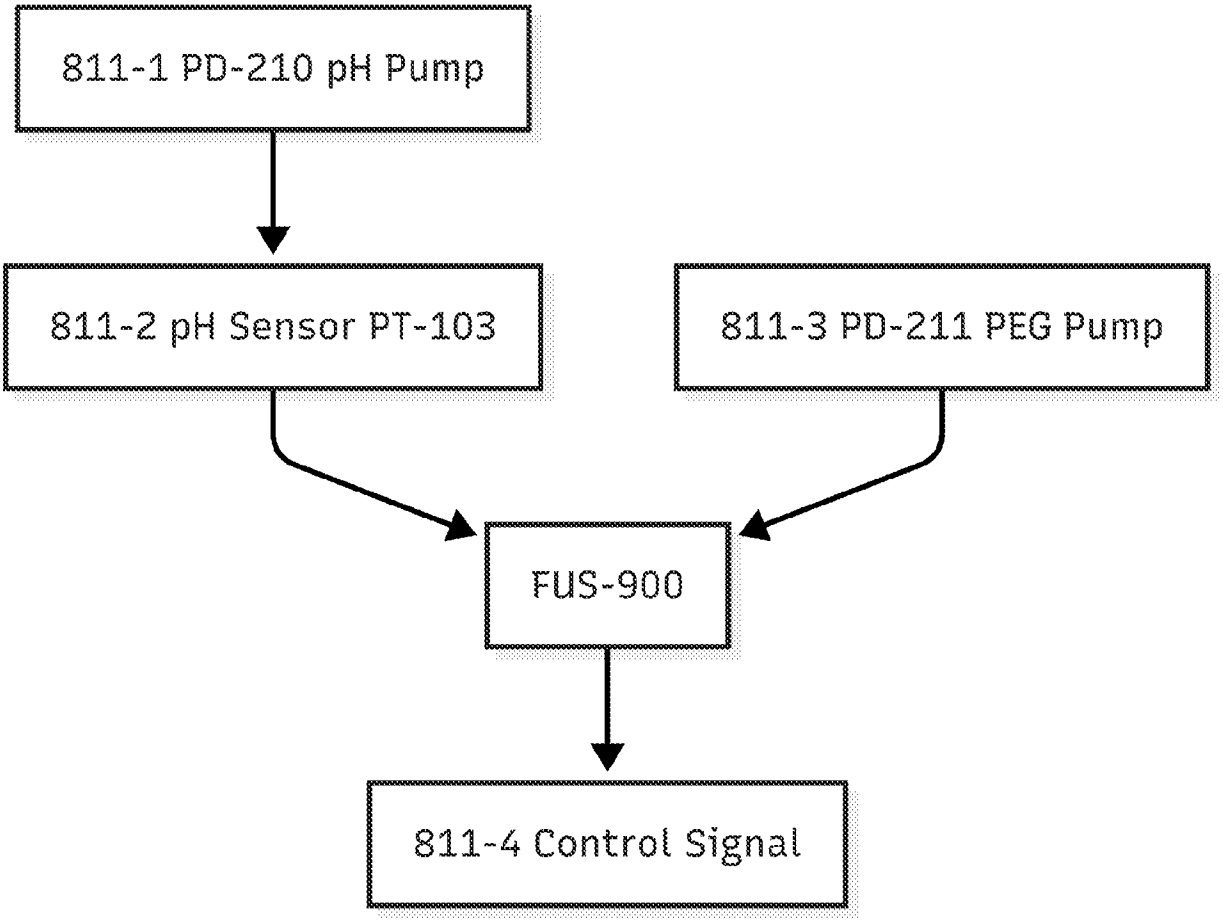
811-1 PD-210 pH Pump
811-2 pH Sensor PT-103
811-3 PD-211 PEG Pump
FUS-900
811-4 Control Signal

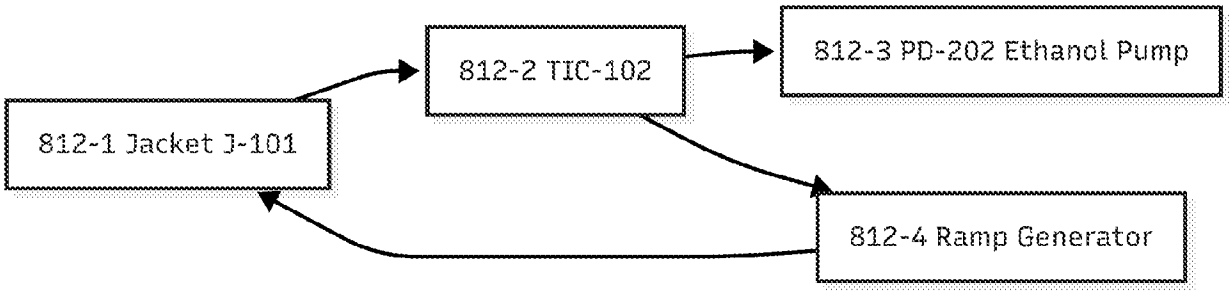
812-2 TIC-102
812-3 PD-202 Ethanol Pump
812-1 Jacket J-101
812-4 Ramp Generator

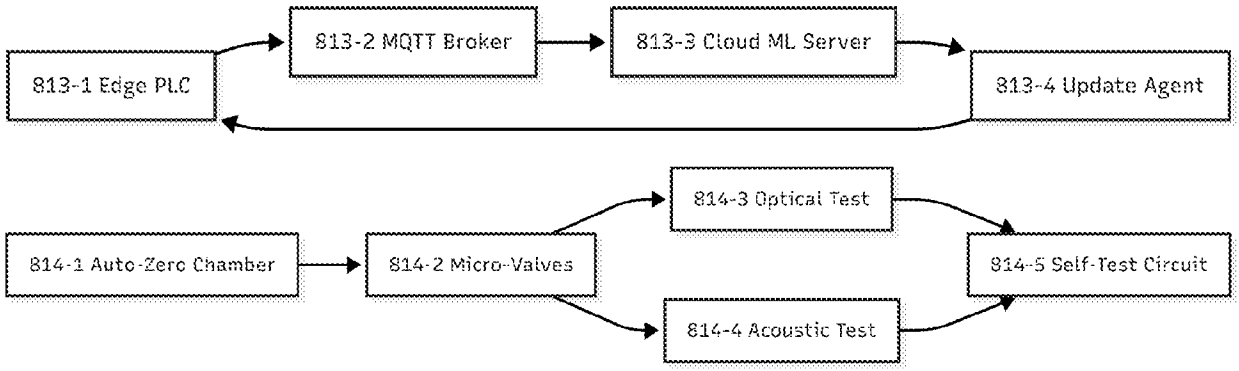
813-1 Edge PLC
813-2 MQTT Broker
813-3 Cloud ML Server
813-4 Update Agent
814-1 Auto-Zero Chamber
814-2 Micro-Valves
814-3 Optical Test
814-4 Acoustic Test
814-5 Self-Test Circuit